Carderock Division
**Naval Surface Warfare Center**
Bethesda, Maryland 20084-5000

CRDKNSWC-HD-0393-25 June 1995

Hydromechanics Directorate
Research and Development Report

# METHOD OF PERFORMING CAPTIVE-MODEL EXPERIMENTS TO PREDICT THE STABILITY AND CONTROL CHARACTERISTICS OF SUBMARINES

by

Jerome P. Feldman

DTIC
ELECTE
AUG 2 2 1995
S F D

19950821 024

Approved for public release.
Distribution is unlimited.

CRDKNSWC-HD-0393-25 METHOD OF PERFORMING CAPTIVE-MODEL EXPERIMENTS TO PREDICT THE STABILITY AND CONTROL CHARACTERISTICS OF SUBMARINES

# MAJOR CARDEROCK DIVISION TECHNICAL COMPONENTS

| | | |
|---|---|---|
| CODE | 011 | Director of Technology |
| | 10 | Machinery Systems/Programs and Logistics Directorate |
| | 20 | Ship Systems and Programs Directorate |
| | 50 | Hydromechanics Directorate |
| | 60 | Survivability, Structures and Materials Directorate |
| | 70 | Signatures Directorate |
| | 80 | Machinery Research and Development Directorate |
| | 90 | Machinery In-Service Engineering Directorate |

CARDEROCK DIVISION, NSWC, ISSUES THREE TYPES OF REPORTS:

1. **CARDEROCKDIV reports, a formal series,** contain information of permanent technical value. They carry a consecutive numerical identification regardless of their classification or the originating directorate.

2. **Directorate reports, a semiformal series,** contain information of a preliminary, temporary, or proprietary nature or of limited interest or significance. They carry an alphanumerical identification issued by the originating directorate.

3. **Technical memoranda, an informal series,** contain technical documentation of limited use and interest. They are primarily working papers intended for internal use. They carry an identifying number which indicates their type and the numerical code of the originating directorate. Any distribution outside CARDEROCKDIV must be approved by the head of the originating directorate on a case-by-case basis.

DD FORM 1473/Security classification of this page: Unclassified

REPORT DOCUMENTATION PAGE

1a. Report security classification: Unclassified
1b. Restrictive markings: -
2a. Security classification authority: -
2b. Declassification/downgrading schedule: -
3. Distribution/availability of report: Approved for public release. Distribution is unlimited.
4. Performing organization report number: CRDKNSWC-HD-0393-25
5. Monitoring organization report number: -
6a. Name of performing organization: Carderock Division, Naval Surface Warfare Center
6b. Office symbol: 564
6c. Address: Bethesda, MD 20084-5000
7a. Name of Monitoring organization: -
7b. Address: -
8a. Name of funding/sponsoring organization:
8b. Office symbol: -
8c. Address:
9. Procurement instrument identification number: -
10. Source of funding numbers: Program Element: -
Project Number: -
Task Number: -
Work Accession Number: -
11. Title: Method of Performing Captive-Model Experiments to Predict the Stability and Control Characteristics of Submarines
12. Personal authors: Jerome P. Feldman
13a. Type of report: Directorate
13b. Time covered: FY95
14. Date of report: -
15. Page count: 30
16. Supplementary notation: -
17. Cosati codes: Field: -
Group: -
Sub-group: -
18. Subject terms: Submarine, hydrodynamics, stability, control
19. Abstract: The methods of performing captive-model experiments and using analytical techniques for predicting the stability and control characteristics of submarines at the David Taylor Model Basin are discussed. An outline of Reynolds number scaling issues is provided, and a typical test program is provided for both the straightline basin and rotating arm. The characteristic equations for both the vertical and horizontal planes of motion are provided, as well as the equations for the margin of stability, stability roots, and damping ratio. There is a discussion of the equations of motion and the

DD FORM 1473/Security classification of this page: Unclassified



DTIC QUALITY INSPECTED 2

DD FORM 1473/Security classification of this page: Unclassified

hydrodynamic significance of the terms in the equations. An uncertainty analysis is provided for the measurements that are associated with performing captive-model experiments.

REPORT DOCUMENTATION PAGE (CONTINUED)

20. Distribution/availability of abstract: Same as report
21. Abstract security classification: Unclassified
22a. Name of responsible individual: J. Feldman
22b. Telephone: 301-227-1475
22c. Office symbol: 564

DD FORM 1473/Security classification of this page: Unclassified


| Accesion For | |
|---|---|
| NTIS CRA&I | ☑ |
| DTIC TAB | ☐ |
| Unannounced | ☐ |
| Justification | |
| By | |
| Distribution / | |
| Availability Codes | |
| Dist | Avail and / or Special |
| A-1 | |

TABLE OF CONTENTS

Page

ABSTRACT....1
INTRODUCTION....1
OVERVIEW OF THE CAPTIVE-MODEL EXPERIMENTAL PROCESS....1
DESCRIPTION OF MODEL, TEST APPARATUS, AND PROCEDURES....3
REYNOLDS NUMBER SCALING....6
TYPICAL TEST PROGRAM....7
STRAIGHTLINE BASIN....7
ROTATING ARM....8
REDUCTION AND PRESENTATION OF DATA....9
TRANSFER OF DERIVATIVES TO A NEW COORDINATE SYSTEM....9
DYNAMIC STABILITY OF SUBMERGED VEHICLES....10
VERTICAL PLANE OF MOTION....10
HORIZONTAL PLANE OF MOTION....12
DISCUSSION OF THE SUBMARINE EQUATIONS OF MOTION....14
LINEAR EQUATIONS OF MOTION....14
NONLINEAR EQUATIONS OF MOTION....15
REVISED NONLINEAR EQUATIONS OF MOTION....16
METHODS TO ESTIMATE THE HYDRODYNAMIC FORCES AND MOMENTS....18
UNCERTAINTY ANALYSIS....19
INTRODUCTION....19
MEASUREMENT OF THE FORCE....19
MEASUREMENT OF THE GAGE INTERACTIONS....21
MEASUREMENT OF THE ANGLE OF ATTACK....22
UNCERTAINTY OF THE CONTROL SURFACE ANGLE....24
UNCERTAINTY OF MODEL LENGTH, SPEED, AND DENSITY....24
PROPAGATION OF INDIVIDUAL UNCERTAINTIES INTO VARIOUS PARAMETERS....24
Stability Derivatives....24
Control Derivatives....25
REPEATABILITY OF THE STABILITY DERIVATIVES....25
UNCERTAINTY IN DETERMINING THE MARGIN OF STABILITY....25
VALIDATION....27
REFERENCES....29

LIST OF FIGURES

1. Sketch of the Planar Motion Mechanism with a model attached....2
2. Sketch of the rotating arm with a model attached using the L-shaped struts....4
3. Sketch of the rotating arm with a model attached using the sting....5

THIS PAGE INTENTIONALLY LEFT BLANK.

## ABSTRACT

The methods of performing captive-model experiments and using analytical techniques for predicting the stability and control characteristics of submarines at the David Taylor Model Basin are discussed. An outline of Reynolds number scaling issues is provided, and a typical test program is provided for both the straightline basin and rotating arm. The characteristic equations for both the vertical and horizontal planes of motion are provided, as well as the equations for the margin of stability, stability roots, and damping ratio. There is a discussion of the equations of motion and the hydrodynamic significance of the terms in the equations. An uncertainty analysis is provided for the measurements that are associated with performing captive-model experiments.


## INTRODUCTION

The stability, control, and maneuvering characteristics of submarines and other submerged vehicles are determined by performing straightline and rotating arm captive-model experiments, radio-control model experiments, and hydrodynamic analyses at the David Taylor Model Basin (DTMB), Carderock Division, Naval Surface Warfare Center. From the results of the captive-model experiments and analyses, the hydrodynamic forces and moments are measured and/or calculated and the appropriate stability and control derivatives and hydrodynamic coefficients are determined. This information, coupled with the motion trajectories from the radio-control model experiments, is used to evaluate the stability and control characteristics of the submarine, to develop equations of motion and a mathematical model of the submarine, and to use the mathematical model to perform computer simulations of the motions of the submarine. A discussion of this process can be found in Reference 1.

## OVERVIEW OF THE CAPTIVE-MODEL EXPERIMENTAL PROCESS

Vertical and horizontal plane Planar Motion Mechanism (PMM) experiments are performed in the straightline basin (usually Towing Carriage 2) to determine the static ($Z_w'$, $M_w'$, $Y_v'$, and $N_v'$), rotary, ($Z_q'$, $M_q'$, $Y_r'$, and $N_r'$), and control derivatives, and the hydrodynamic force and moment coefficients associated with variations in angle of attack, angle of drift, and over and under propulsion. If the vehicle is symmetric (for example, a vehicle with a hull that is a body of revolution, fitted with four identical cruciform stern appendages), then only vertical plane experiments need to be performed. The PMM is described in References 2 and 3. A sketch of the PMM is provided in Figure 1. The nomenclature used for analyzing the stability and control

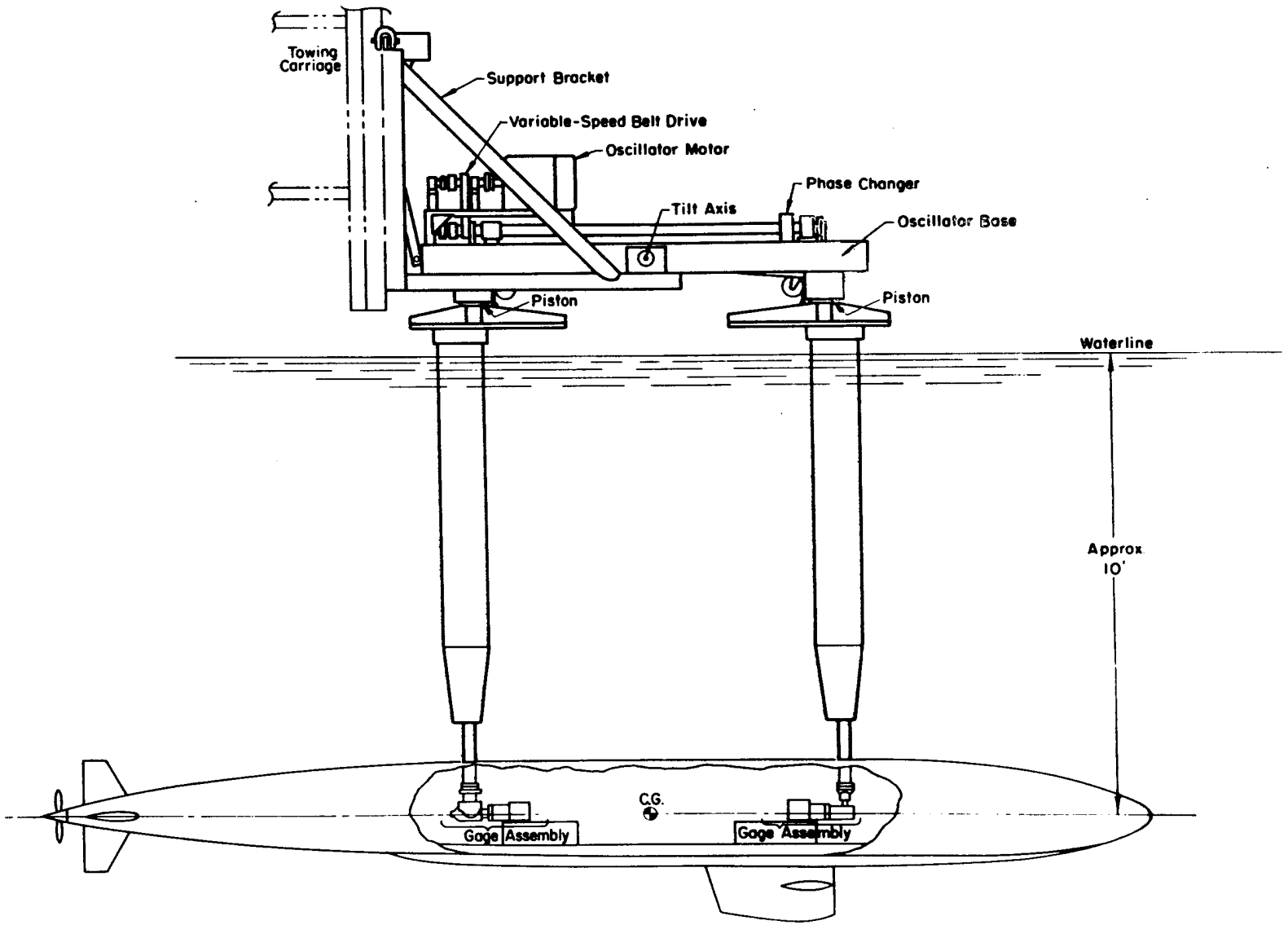


Fig. 1. Sketch of the Planar Motion Mechanism with a model attached.

characteristics of submarines is provided in Reference 4.

The hydrodynamic forces and moments are measured over a range of angles of attack (up to about 18 degrees) and sternplane angles in the vertical plane, and over a range of angles of drift and rudder angles in the horizontal plane. In addition, oscillation experiments are performed in the heaving and pitching mode (swaying and yawing in the horizontal plane) at zero speed and underway. By measuring the in-phase and out-of-phase components of the hydrodynamic force and moment the added mass, added moment of inertia, and rotary (effect of angular velocity) derivatives can be determined.

The rotating arm experiments are performed with the model towed either using two struts or with a sting. When the model is towed with two struts, the tests are conducted with the propeller fitted to the model, and are performed over a range of angles of attack (or angles of drift in the horizontal plane), radii, and sternplane (or rudder angles) in order to derive the nonlinear, coupled hydrodynamic force and moment coefficients. In addition, the rotary (angular velocity) derivatives are measured by performing experiments at relatively large radii, and these measurements are generally more accurate than the corresponding measurements from the straightline oscillation experiments. When the model is towed using the sting, the tests are conducted without the propeller. The sting-mounted model tests are performed over a similar range of conditions described for towing with struts, but the tests are also performed over combinations of yaw and pitch angles and yawing and pitching angular velocities. The rotating arm used at DTMB is described in Reference 5. A sketch of the apparatus is provided in Figure 2. A sketch of the sting is shown in Figure 3.

## DESCRIPTION OF MODEL, TEST APPARATUS, AND PROCEDURES

The model used for the captive-model experiments is usually 15 to 24 feet in length and approximately 18 to 24 inches in diameter. The model hull and appendages were made of fiberglass, except for the aluminum bulkheads. Platforms for mounting equipment, located inside the model, were also made of aluminum. The model is free-flooding and is fitted with a channel located along the axis of the model to be used to attach the force gages to the model.

Three force gages are located at the forward strut and three are located at the aft strut to measure the longitudinal, lateral, and vertical forces. Each assembly is attached to the strut through a gimbal which provides freedom in pitch and yaw. The lateral or vertical forces exerted on the model are experienced as pure reaction forces at each gimbal center, since the moment at the centers is zero and the system is essentially a simply supported beam. The reaction forces are measured by the gages and are equal to the total lateral or vertical force applied to the model. These reaction forces are then resolved with respect to the point that is midway between the gimbal centers to obtain the pitching or yawing moment. The moment is simply the difference in the reaction forces multiplied by half the distance between the gimbal centers. In addition, at one of the struts a gage is connected between the vertical force

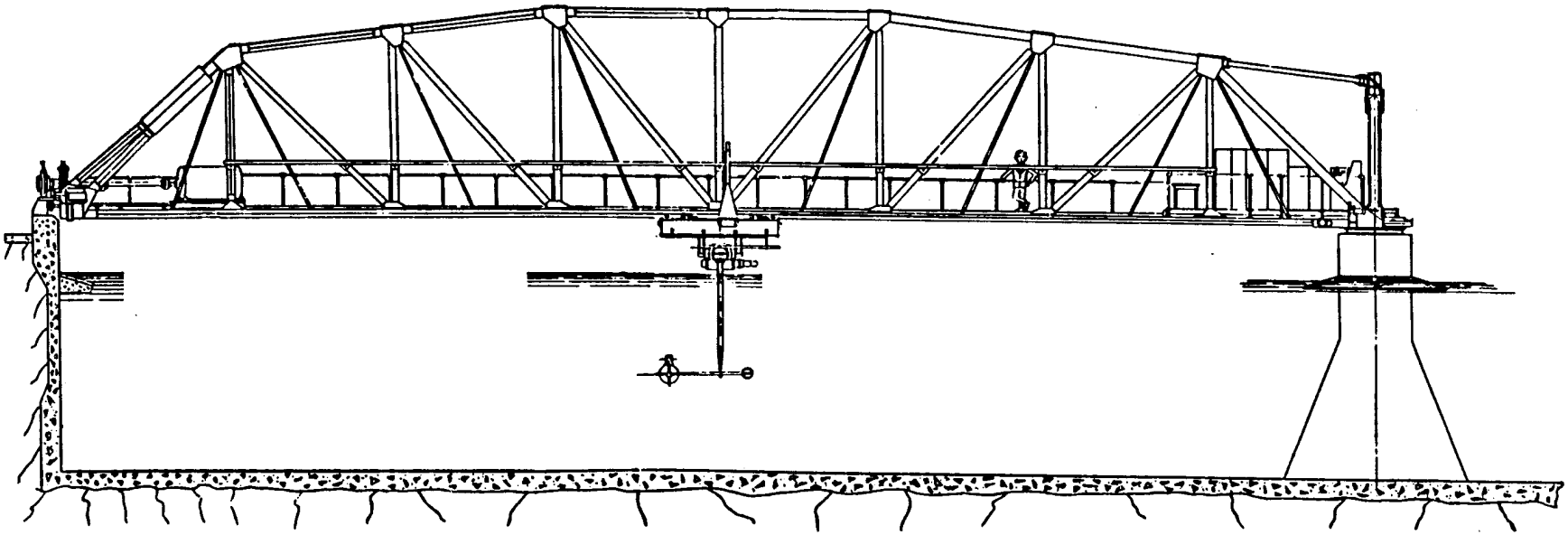

Fig. 2. Sketch of the rotating arm with a model attached using the L-shaped struts.

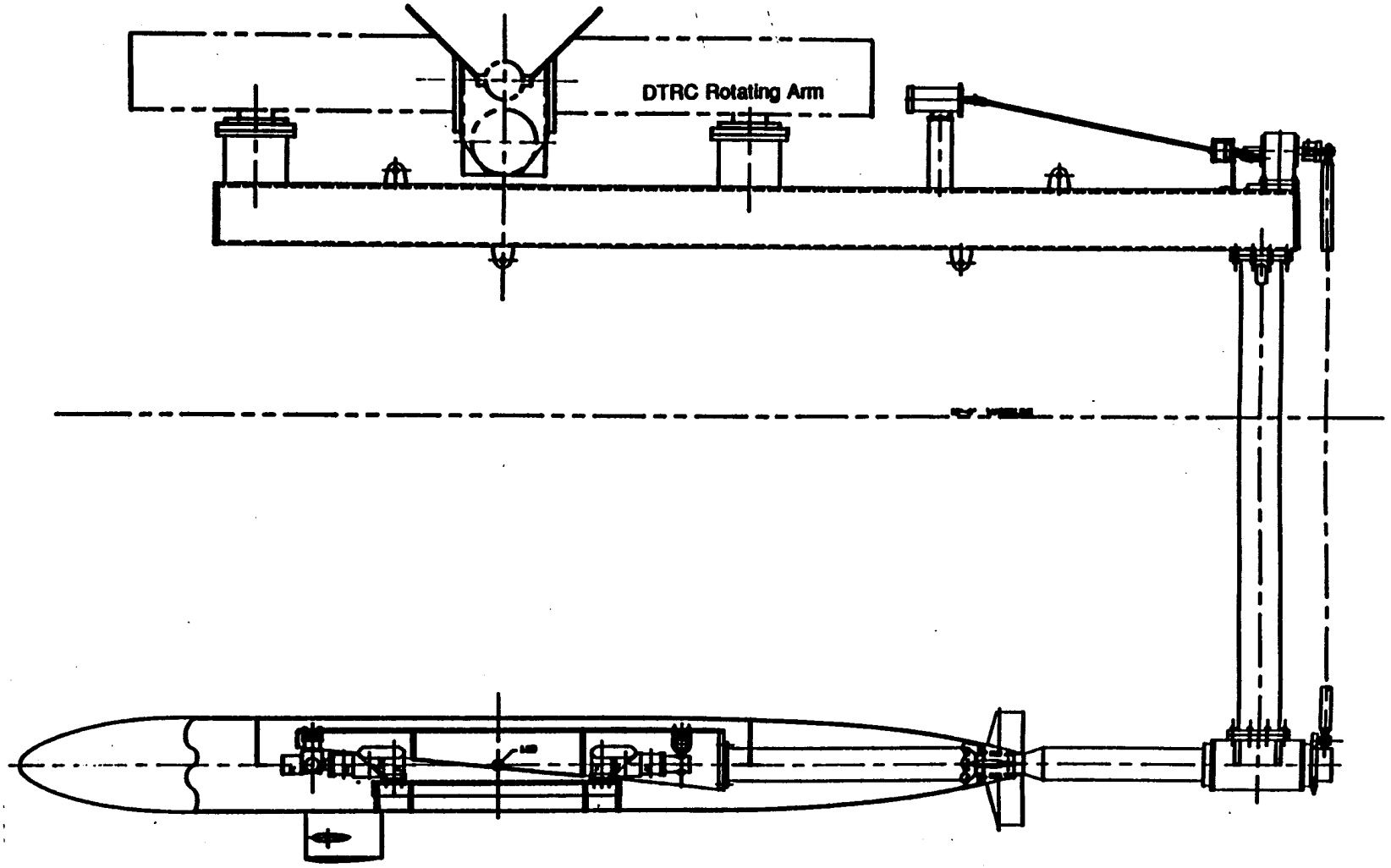


Fig. 3. Sketch of the rotating arm with a model attached using the sting.

gage and the strut to measure rolling movement.

Two longitudinally spaced cut-outs in the hull are provided for the two struts to pass through. Provision is made for mounting a motor inside the model to drive the propulsor, and a magnetic pickup and gear tooth are located on the drive shaft to measure the rpm. The control surfaces are either set manually by using stock clamps or remotely using actuator motors and angle transducers.

After each gage is calibrated they are assembled into a forward and aft unit. The gage assemblies are attached to the gage channel inside the model, the propulsion motor is mounted to its support plate inside the model, the propulsor drive shaft is aligned, and the magnetic pickup and gear are positioned inside the model. The model is then ballasted for neutral buoyancy and zero trim using styrofoam.

The A-frame, Planar Motion Mechanism, Stability and Control Instrumentation Penthouse, and model are attached to Towing Carriage 2. The various electrical cables are connected, and polarities are determined for all of the force and moment gages, angle transducers, and other electrical signals.

The preliminary operations before the experiments can begin include tilting the model several times to remove entrapped air, performing an inclination test to determine the actual difference between the weight and buoyancy of the model, and making several passes down the basin to determine the self propulsion rpm for the speeds at which the test will be performed.

The rotating arm experiments are performed with essentially the same set up. However, either two L-shaped struts or a sting are used to tow the model. The two horizontal struts are attached at one end to the gages inside the model and at the other end to the base of the vertical struts which are supported from the rotating arm. The rationale for the L-shaped struts is to minimize any lift induced on the hull from the struts as the model is towed at various radii (pitching angular velocities), angles of attack, and control surface angles.

However, the struts can not be used for measuring the hydrodynamic forces due to combined yaw and pitch angles and yawing and pitching angular velocities because there would be unacceptably large interference effects that would invalidate the measurements. The interference effects associated with a sting-mounted model, particularly at the tail, are relatively small. For both the strut-mounted and sting-mounted models, the forces and moments are measured with the same gage system as are the straightline experiments.

## REYNOLDS NUMBER SCALING

The standard program of static stability and control experiments is usually conducted in the straightline basin and rotating arm at a model speed of about 4.5 to 6.5 knots which corresponds to a Reynolds number based on the length between perpendiculars of about 10 to 15 million. The over-and-under propulsion experiments are usually performed in the straightline basin at a speed of 3 to

4 knots which corresponds to a Reynolds number of about 10 million. The experiments performed with the Yaw Table on Carriage 1 at angles of attack from -90 to 90 degrees are usually performed at a model speed of about 2 knots which corresponds to a Reynolds number of about 6 million based on length and about 0.6 million based on diameter.

As mentioned, both the straightline and rotating arm experiments are performed at a Reynolds number of about 10 to 15 million based on the overall length of the model. Experiments have been performed with various submarine designs to investigate the effect of scaling on the hydrodynamic forces and moments developed on the hull and appendages either at an angle of attack or with the control surfaces deflected to an angle. These experiments have indicated that the hydrodynamic force and moment coefficients vary with Reynolds number. However, there appears to be a Reynolds number above which the hydrodynamic force and moment coefficients no longer significantly change with Reynolds number. Based on comparisons between the results of various captive-model experiments and full-scale trials, if model experiments are performed at Reynolds numbers above 10 to 15 million, then any scale effects between model and full-scale appear to be negligible for the purposes of making stability and control predictions.

According to Reference 6, for a Reynolds number based on diameter of 0.6 million there is fully turbulent separation up to an angle of attack of about 30 degrees and transitional separation from 30 to 90 degrees. Although this criterion is based on experiments with missile-like bodies which have pointed noses and blunt bases, it is assumed that it is approximately correct for submarine hulls as well. Hence, it is possible that there is some scale effect in the data for angles of attack between 30 and 90 degrees.

## TYPICAL TEST PROGRAM

### STRAIGHTLINE BASIN

A typical program for the straightline Carriage 2 experiments, which is performed at a Reynolds number of about 10 to 15 million, is as follows:

| Type of Test | Angle of Attack/ Drift (deg) | Sternplane/Rudder Angle (deg) |
|---|---|---|
| Static Stability | -18 to 18 | 0 |
| Control | -4 to 4 | -25 to 25 |
| Heaving/Swaying and Pitching/Yawing | 0 | 0 |
| Over-and-Under Propulsion | 0 | -15 and 15 |
| | -18 to 18 | 0 |
| | 0 | 0 |

The oscillation experiments are performed only at standstill, since the rotary derivatives are determined from the rotating arm tests. The frequencies of

oscillation are 1.112 and 2.220 radians per second. The over-and-under propulsion experiments are generally performed at a speed corresponding to a Reynolds number of about 8 to 10 million because of the torque limitation of the propulsion motor. The contribution of over-and-under propulsion to the hydrodynamic forces and moments is probably not significantly effected by the reduced Reynolds number. The range of over propulsion rpm's are from self-propulsion to at least twice the self-propulsion rpm. The under propulsion tests are performed to a reverse (backing) rpm about twice the self-propulsion rpm. The longitudinal force is also measured for several rpm's at zero speed.

ROTATING ARM

A typical horizontal plane program for the rotating arm experiments, which is also performed at a Reynolds number of about 10 to 15 million, requires varying the nondimensional yawing angular velocity, the rudder angle, the angle of drift, and the propulsion ratio. The nondimensional yawing angular velocity is given by

$$r' = L/R = 2/D'$$

where L is the length of the model, R is the radius of the rotating arm at which the model is being towed, and D' is the turning diameter in ship lengths.

An estimate is made of the nondimensional yawing angular velocity and angle of drift as a function of rudder angle before the test is performed using the results of the straightline basin experiments and analytical methods which are available at DTMB. An example of a test matrix for a submerged vehicle with an estimated maximum r' of 0.65 for a maximum rudder angle of 30 degrees is as follows:

| r' | Rudder Angle in Degree | Angle of Drift in Degrees | Propulsion Ratio |
|---|---|---|---|
| 0.20 | 0 | 0 | self |
| 0.25 | 0 | 0 | self |
| 0.30 | 0 | 0 | self |
| 0.40 | 0 | 0 | self |
| 0.40 | 0 | 0 | vary |
| 0.20 | 0 | 0,3,6 | self |
| 0.20 | -5 | 0,3,6 | self |
| 0.20 | -10 | 0,3,6 | self |
| 0.40 | -5 | 6,8,10 | self |
| 0.40 | -10 | 6,8,10 | self |
| 0.40 | -10 | 6 | vary |
| 0.40 | -15 | 6,8,10 | self |

| | | | |
|---|---|---|---|
| 0.55 | -15 | 8,10,12 | self |
| 0.55 | -20 | 8,10,12 | self |
| 0.55 | -20 | 10 | vary |
| 0.55 | -25 | 8,10,12 | self |
| 0.65 | -25 | 10,12,15 | self |
| 0.65 | -30 | 10,12,15 | self |
| 0.65 | -30 | 15 | vary |

The three values of the angle of drift that are selected as test conditions for each value of r' bracket the equilibrium turning condition. The test matrix is modified, if necessary, as the experiments progress based on the results of the data.

## REDUCTION AND PRESENTATION OF DATA

The hydrodynamic force and moment measurement are nondimensionalized using the overall length of the model. The nondimensional data are presented in graphical and tabular form. Tares are removed from the straightline static stability and control data, but not from the oscillation experiments. The rotating arm data is presented without the tare removed, but the values of the tares are given in a table. The accuracy of the experiments is discussed in the uncertainty analysis which is provided in a later section.

The values of the derivatives are determined from the data and are presented in a table. These derivatives are referred to the axes which have their origin at the reference point which is midway between the gimbal centers. The location of the reference point does not have to correspond with the longitudinal location of the center of buoyancy (and center of gravity). The method of transferring the hydrodynamic moments to a new coordinate system is discussed in the next section.

The values of the static derivatives are determined directly from the slopes at the origin of curves of force and moment coefficients versus angle of attack and drift. The values of the control derivatives are determined from the slopes at the origin of curves of force and moment coefficients versus control surface deflection angle. The angular velocity derivatives obtained from the oscillation experiments are obtained from the data using the reduction equations given in Reference 3. The angular velocity derivatives obtained from the rotating arm experiments are determined from the slopes of the force and moment coefficients versus the nondimensional yawing or pitching angular. All derivatives with respect to angular quantities are given as "per radian."

## TRANSFER OF DERIVATIVES TO A NEW COORDINATE SYSTEM

As mentioned previously, it is not always possible to perform captive-model experiments with the origin of the coordinate system (reference point) at the longitudinal location of the center of buoyancy. It is desirable to transfer the hydrodynamic moments, as well as the stability and control derivatives,

from the reference point used for the experiments to a new reference point located at the longitudinal location of the center of buoyancy.

The original and new coordinate systems are designated by the symbols o and n, respectively. Assume that the normal force Z acts at the distance a+b from the origin of the original coordinate system and the distance b from the origin of the new coordinate system. The pitching moments referred to the original and new coordinate systems are $M_o$ and $M_n$, respectively, and are related by the following expression

$$M_o = -Z(a + b) = -Za + M_n$$

where a is the distance between the two coordinate systems. If the origin of the original coordinate system is rotating with a pitching angular velocity q, then the origin of the new coordinate system is both rotating with a pitching angular velocity q and translating with a normal translational velocity $w_n$ given by

$$w_n = -qa$$

Hence, the normal force and pitching moment are functions of q and $w_n$ if they are referred to the new coordinate system and are functions of only q if they are referred to the original coordinate system. The normal force is given by

$$Z_n(q,w_n) = Z_o(q)$$

$$(Z_q)_n q + Z_w w_n = (Z_q)_o q$$

$$(Z_q)_n = (Z_q)_o + Z_w a$$

The pitching moment is given by

$$M_n(q,w_n) = Z_o(q)a + M_o(q)$$

$$(M_q)_n q + (M_w)_n w_n = (Z_q)_o qa + (M_q)_o q$$

$$(M_q)_n = (M_q)_o + (M_w)_n a + (Z_q)_o a$$

$$(M_q)_n = (M_q)_o + Z_w a^2 + (M_w)_o a + (Z_q)_o a$$

Similar equations can be written for the acceleration derivatives.

## DYNAMIC STABILITY OF SUBMERGED VEHICLES

### VERTICAL PLANE OF MOTION

The dynamic stability of the vehicle in the vertical plane at various ahead speeds can be analyzed on the basis of the nondimensional linearized equations for the normal force and the pitching moment. When the equations are solved

simultaneously using Laplace transforms, the characteristic equation is a cubic in the variable s. The symbol s designates the image complex variable corresponding to the original real variable t which designates time. The characteristic equation is as follows:

$$
\begin{aligned}
&[(Z_{\dot{w}}'-m')(M_{\dot{q}}'-I_y') - (Z_{\dot{q}}'+x_G'm')(M_{\dot{w}}'+x_G'm')]s^3 \\
&\quad + [(Z_{\dot{w}}'-m')(M_q'-x_G'm') + Z_w'(M_{\dot{q}}'-I_y') \\
&\quad - (Z_{\dot{q}}'+x_G'm')M_w' - (Z_q'+m')(M_{\dot{w}}'+x_G'm')]s^2 \\
&\quad + [Z_w'(M_q'-x_G'm') + (Z_{\dot{w}}'-m')M_\theta' - (Z_q'+m')M_w']s \\
&\quad + Z_w'M_\theta' = 0
\end{aligned}
$$

The nondimensional roots of the characteristic equation will vary with speed due to the nondimensional hydrostatic metacentric moment derivative $M_\theta'$. Hence, the resulting motion varies with speed, and is either oscillatory (under damped) or aperiodic (over damped). Dynamic stability is indicated if the signs of the roots of the characteristic stability equation are negative.

The characteristic equation reduces from a cubic to a quadratic in the Laplace transform operator if the metacentric derivative is zero. Since the metacentric derivative approaches zero as the ahead speed increases, an indication of the dynamic stability or instability at "infinite" speed is the positive or negative sign, respectively, of the constant term of the quadratic. If the submarine is dynamically stable at "infinite" speed, it will be dynamically stable at all ahead speeds, since the contribution of the metacentric derivative increases the dynamic stability.

As discussed in References 7 and 8, the value of the margin of stability $G_v$ in the vertical plane is calculated using the following equation:

$$G_v = 1 - M_w'(Z_q' + m')/[Z_w'(M_q'-x_G'm')]$$

The margin of stability is constructed from the components of the constant term of the quadratic equation. Basically, it is a measure of how much, and in what direction, the constant term is different from zero. If the value of $G_v$ is greater than zero, the vehicle is dynamically stable. If the value is less than zero, the vehicle is unstable. The magnitude of the margin of stability index indicates the degree of dynamic stability as follows:

| Range of $G_v$ | Degree of Stability |
|---|---|
| negative | unstable |
| positive | stable |
| 0.0 to 0.2 | marginally stable |
| 0.5 to 0.7 | good dynamic performance |
| greater than 0.8 | highly stable |

The motion of the vehicle in the vertical plane is nonoscillatory or overdamped if the three roots of the characteristic equation are all real. The vehicle will be stable if the three real roots are negative. The motion of the vehicle is oscillatory or underdamped if the three roots of the characteristic equation are as follows:

$$s_1 = -a + ib$$
$$s_2 = -a - ib$$
$$s_3 = -c$$

and the response of the vehicle in pitch is then

$$\theta(t) = Ae^{-at}\sin(bt + k) + Ce^{-ct}$$

where the constants A, C, and k depend on the initial conditions. The vehicle will be stable if the real parts of the roots are negative.

The damping ratio is given by the expression

$$DR = [a^2/(a^2 + b^2)]^{1/2}$$

The value of the damping ratio indicates the following performance characteristics:

| Range of DR | Dynamic Performance (Stable Vehicle) |
|---|---|
| 0 to 1 | oscillatory, under damped |
| 0 to 0.2 | oscillatory, lightly damped |
| 1 | non-oscillatory, critically damped |
| greater than 1 | non-oscillatory, over damped |

It is desirable for the damping ratio of a submerged vehicle to be about 0.7 (under damped) at moderate speeds for good dynamic performance. At low speeds the damping ratio of the vehicle may be less than 0.2 (lightly damped). This is due to the relatively large effect of the hydrostatic metacentric pitching moment compared to the hydrodynamic pitching moments. At relatively high speeds the damping ratio of the submerged vehicle may be greater than 1.0 (overdamped) and non-oscillatory due to the relatively small effect of the metacentric moment. The metacentric moment provides a restoring moment that is analogous to the restoring force provided by a spring which is supporting a mass.

HORIZONTAL PLANE OF MOTION

The characteristic equation of motion for the horizontal plane is a quadratic equation since there is no metacentric moment derivative as follows:

$$[(Y_{\dot{v}}'-m')(N_{\dot{r}}'-I_z') - (Y_{\dot{r}}'-x_G m')(N_{\dot{v}}'-x_G'm')]s^2$$

$$+ [(Y_{\dot{v}}'-m')(N_r-x_G'm') + Y_v'(N_{\dot{r}}'-I_z')$$

$$- (Y_{\dot{r}}'-x_G'm')N_v' - (Y_r'-m')(N_{\dot{v}}'-x_G'm')]s$$

$$+ Y_v'(N_r'-x_G'm') - (Y_r'-m')N_v' = 0$$

Therefore, the resulting motion is always aperiodic at all speeds. Analogous to $G_v$, the equation for $G_h$ is as follows:

$$G_h = 1 - N_v'(Y_r' - m')/[Y_v'(N_r'-x_G'm')]$$

A value of $G_h$ of about 0.2 provides good dynamic performance in the horizontal plane.

## DISCUSSION OF THE SUBMARINE EQUATIONS OF MOTION

The equations of motion which will be described in the following sections are written in terms of the complete submarine configurations. The practice at DTMB is to conduct the required experiments with models that are fully equipped with all of the significant appendages, including the bridge fairwater, deck, sailplanes or bowplanes, sternplanes, rudders, and propellers. The hydrodynamic force and moment coefficients that are derived from the experiments can be used with an appropriate set of equations of motion to perform computer simulations of the motions of the submarine. In addition, by removing the appendages in a systematic fashion it is possible to evaluate the contribution of each appendage to the total forces and moments.

Captive-model experiments, both fully appended and "built-up," have been performed on many types of submarines at DTMB. Using this data base a computer code has been developed to estimate many of the linear and nonlinear forces and moments given only the geometric characteristics of a new submarine design. Theoretical methods have been developed, as well, to calculate the hydrodynamic forces and moments developed on the hull and appendages as a function of angle of attack, angle of drift, or control surface angle. For example, a discrete vortex model was developed to predict the flow separation from the hull and the trailing wake effects, and a vortex lattice method was used for the prediction of the hull-fin interaction.

An alternative method of developing the equations of motion for a submarine is to perform system identification experiments with the radio-control model. The system identification method used at DTMB is based upon obtaining a series of local models (either linear or nonlinear) for a series of steady conditions which are defined by a constant control surface angle, for example, a rudder angle. The steady value of the states are referred to as the equilibrium states for that rudder angle. A series of small perturbations about the rudder angle will in turn generate a sequence of small perturbations in the states which can then be used to identify a local model. The local models are approximations of the global model defined at the steady equilibrium condition.

### LINEAR EQUATIONS OF MOTION

When the linear differential equations of motion were developed for submarine motions in the late 1940's a mathematically rigorous derivation was developed using a Taylor Series expansion. It was assumed that the submarine would experience only small motions (small perturbations) in response to appropriately small excitations in the form of small sternplane, sailplane, or rudder angles. Since the submarine is assumed to be symmetrical (that is, there is no difference geometrically between the port and starboard sides of the submarine), the normal (vertical) force and pitching moment were assumed to be a linear function of the vertical translational velocity, the vertical translational acceleration, the pitching angular velocity, and the pitching angular acceleration. In addition, due to the metacentric height of the submarine there is a hydrostatic pitching moment which is a function of the

pitch angle.

It was assumed based on hydrodynamic considerations that the normal force and pitching moment would either not vary significantly with the other state variables (velocities and accelerations) or vary with these variables in a nonlinear fashion. It is important to emphasize that in constructing the linear model not only are variables like pitching angular velocity squared not included, but also variables like the product of pitching angular velocity and vertical translational velocity. Hence, the off-diagonal terms in the added mass matrix are not included in the linear model.

Similarly, it was assumed that the lateral force, yawing moment, and rolling moment varied linearly only with the lateral translational velocity and acceleration, the yawing angular velocity and acceleration, and the rolling angular velocity and acceleration. Again, because of the metacentric height there is a linear term in the rolling moment equation which is a function of roll angle. The longitudinal force equation cannot be linearized satisfactorily.

Hence, the linear differential equations of motion for the vertical force and pitching moment are coupled together, as are the equations for the lateral force and yawing and rolling moments. The vertical plane stability and control characteristics can be evaluated by solving the former set of equations simultaneously, and the horizontal plane stability and control characteristics can be evaluated by solving the latter set of equations.

NONLINEAR MATHEMATICAL MODEL

When the first nonlinear mathematical model was developed in the 1950's it was decided to account for certain significant nonlinear contributions by extending the Taylor Series expansion. Several years later it was decided to improve these nonlinear equations of motion by replacing the Taylor Series type terms with terms that better represented the trends that were consistently showing up in the submarine data base which was being developed at that time by performing extensive captive-model tests on a large number of submarine designs. The mathematical model that resulted from this effort is documented in Reference 9.

For example, it was found that the variation of normal force and pitching moment with angle of attack and lateral force and yawing moment with angle of drift could be fitted to a mathematical expression which included the terms cosine squared of the angle of attack or drift, the product of cosine and sine of the angle of attack or drift, and the product of sine and the absolute value of sine of the angle of attack or drift. The first term is required to represent the force or moment at zero angle of attack. The second term primarily represents the linear portion of the curve, that is the effect of angle of attack on the lift developed on the hull and appendages. The third term represents the nonlinear portion of the curve.

At an angle of attack or drift of 90 degrees the first and second term drop

out, and the third term represents the cross flow drag or moment. Since the sine of the angle of attack is equal to the nondimensional vertical translational velocity (the sine of the angle of drift is equal to the negative nondimensional lateral velocity) and the cosine of the angle of attack or drift is equal to the nondimensional axial translational velocity, the fit of the data can be inserted into the equations of motion given in Reference 1. Since the curves of normal force and pitching moment are not usually symmetrical for positive and negative angles of attack due to the bridge fairwater, sailplanes, and deck, additional terms are used to fit the data, namely, a term which is a function of the absolute value of the sine of the angle of attack and a term which is a function of the angle of attack squared.

The fact that submarines develop forces and moments due to the cross flow over the hull at large angles of attack or drift require that the equations of motion include additional terms which vary with the product of, for example, vertical translational velocity and pitching angular velocity. Since the flow over the afterbody and stern appendages is affected by the propeller rpm, it is necessary to include terms in the equations of motion which account for the contribution of over and under propulsion, that is acceleration and deceleration of the submarine. Other terms are required to account for the lift developed on the control surfaces when they are deflected.

When the submarine is in a turning maneuver there is a distribution of angle of drift developed along the length of the hull. The local angle of drift is relatively small along the forebody, but is relatively large along the afterbody. Lift is developed on the bridge fairwater due to the local angle of drift. It is assumed that there is a bound vortex at the quarter chord of the bridge fairwater and a tip vortex which trails aft. An image vortex is located inside the hull. This system of vorticity sets up circulation around the hull which in combination with the local cross flow causes a hydrodynamic pressure difference to occur between the deck and keel. The normal force and pitching moment which result can be shown to vary with the angle of drift squared, at least for moderate angles of drift. Of course the equations of motion are written in terms of lateral translational velocity rather than angle of drift. Since the local angle of drift is a function of the angle of drift and yawing angular velocity, there are additional terms in the equations of motion which are functions of yawing angular velocity squared and the product of yawing angular velocity and lateral translational velocity.

The term in the normal force and pitching moment equations which is a function of pitching angular velocity and sternplane angle was thought to be an important contribution twenty years ago, but based on recent rotating arm experiments and system identification experiments it is no longer regularly included in the equations. The other terms in Reference 1 are self-explanatory.

## REVISED NONLINEAR MATHEMATICAL MODEL

The revised nonlinear mathematical model is documented in Reference 10. In these equations of motion there are two integrals in the lateral and normal

force and in the pitching and yawing moment equations which do not appear in the nonlinear model given in Reference 1. One integral is formulated to model the cross flow drag force contributions on the submarine. Since in a maneuver the local velocity varies along the hull due to the angular velocity of the submarine, it is desirable to account for this by first deriving a sectional cross flow drag coefficient $C_d$ from the fitted value of the vertical force coefficient $Z_{w/w/}'$.

The force contribution due to cross flow drag is then the integrated value of the sectional cross flow drag coefficient multiplied by the local velocity squared over the hull and the local projected area. It is assumed that the submarine is maneuvering with both lateral and vertical translational velocities v and w, respectively, and yawing and pitching angular velocities r and q, respectively. Hence, the magnitude of the local velocity at the longitudinal location along the hull x is $U_x = [(w - xq)^2 + (v + xr)^2]^{1/2}$. The force contribution in, for example, the vertical direction is determined by multiplying the aforementioned integrand by $(w - xq)/U_x$. The term $Y_{v/v/R}'$, for example, is the difference between the experimental value of $Y_{v/v/}'$ and the cross flow drag force contribution in the vertical direction.

As mentioned previously, in a turning maneuver lift is progressively developed on the bridge fairwater causing vorticity of varying strength to be shed and convected downstream along the hull and past the stern appendages. Since the vorticity causes both circulation around the hull, lift on the hull, and additional lift on the stern appendages, it is important to represent in the equations the time interval required for the vorticity of some specific intensity to be convected from the bridge fairwater to some aft location x along the hull. First the longitudinal component of the velocity u is integrated over an interval of time $t_x$ which is the time required for the vorticity to be convected from the longitudinal location of the bridge fairwater to the longitudinal location x aft of the bridge fairwater. For a specified location x the interval of time $t_x$ can be determined. From the experimental values of $Z_{vv}'$ and $M_{vv}'$ the effective lift coefficient of the bridge fairwater in the presence of the hull $C_L$ can then be determined. The instantaneous lift developed at the location on the hull x aft of the bridge fairwater is then the product of the lift developed on the bridge fairwater, the local lateral velocity component, and the local lateral velocity at the bridge fairwater at the time the vortex was shed. The total force on the hull is the integration taken over the sections of the hull aft of the bridge fairwater.

There are two additional effects related to the rolling moment equation. A rolling moment is developed on cruciform stern appendages when the submarine is subjected to combined rolling and yawing motions that occur in a turning maneuver. This rolling moment which is induced on the stern appendages by the vorticity shed from the bridge fairwater is represented by the $K_i'$ term. A rolling moment is induced on the stern appendages by the differential lift caused by the masking effect of the hull on the leeward stern appendages which is represented by the $K_{4s}'$ and $K_{8s}'$ terms. The $K_{vR}'$ term is determined by

taking the difference between the measured $K_v'$ and the roll induced on the stern appendages by the vorticity shed from the bridge fairwater.

## METHODS TO ESTIMATE THE HYDRODYNAMIC FORCES AND MOMENTS

The complete expressions for the added mass terms for a submarine are given in Reference 11, and the complete expressions for the weight and buoyancy terms are given in Reference 12. Reference 13 provides a method for estimating the free-stream lift developed on control surfaces and appendages like bridge fairwaters. Reference 14 provides a method for estimating the lift developed on control surfaces and appendages in the presence of the hull, the lift induced on the hull due to the presence of the appendage, and the lift induced on the hull and appendages due to the downwash from forward lifting surfaces. Reference 15 provides a method of estimating the lift developed on stern appendages located on the afterbody of the submerged vehicle. The lift developed on these stern appendages is dependent on the contribution of the relatively thick boundary layer over the afterbody.

## UNCERTAINTY ANALYSIS

### INTRODUCTION

As discussed in Reference 16, there are two contributions to the total uncertainty. The first contribution is called bias, and it is defined as any effect which is held constant throughout the experiment and which leads to a constant variation of the results from the true value. The second contribution is defined as the precision error, and it is the random scatter of data which is seen when experiments are repeated under nominally identical conditions. The uncertainty in the measurements of each force and the angle of attack are discussed.

### MEASUREMENT OF THE FORCE

Sources of error include the following: (1) the 4-inch block gages (variable reluctance transducers) used to measure the forces, (2) the signal conditioners, (3) the 6-Hz low-pass filters, (4) the 15-bit analog-to-digital converter, (5) the power supply for the signal conditioners, (6) the alignment of the apparatus used to calibrate the 4-inch block gages, (7) the alignment of the gages in the calibration stand, (8) the sensitivity of a gage to forces applied perpendicular to its axis, (9) the errors in the fabrication of the model, (10) the changes in the water temperature which affects the density and viscosity, (11) the currents in the basin, and (12) the errors in ballasting the model for neutral buoyancy and trim, (13) the unanticipated unsteady conditions while data are being collected, and (14) the interpretation of data, fairing of curves through the data, determination of slopes, choice of mathematical fit of data, and choice of data to be fitted. Most of the bias and precision errors are negligible based on observations, tests, and analyses performed over a period of many years.

The calibration precision error of a 4-inch block gage is determined by placing 5 and 10 pounds weights, each having an accuracy of 0.01 percent, to a pan which was attached with a 5 to 1 lever arm to the gage. The maximum load applied to the gage is about 300 pounds, both in the positive and negative directions.

If the calibration were to consist of the infinite number of readings, then the readings would coincide with the Gaussian or normal distribution. The distribution of readings is called the parent population. A sample population is composed of a finite number of readings taken from the parent population. The distribution has both a mean and a standard deviation. As the value of the standard deviation increases, the range of the values of the expected readings also increases. That is, the scatter in the readings is large and thus the precision error is large. The probability of a reading being between a band of plus and minus 1.96 times the standard deviation of the mean is 95 percent. That is, 95 percent of the readings from a Gaussian parent population are within a band of plus and minus 1.96 times the standard deviation of the mean.

The relationship between the sample mean m and the corresponding parent population mean $m_*$ can be determined by making use of the "t" probability distribution. For a given sample size n, the random variable t which has a "t" probability distribution is given by

$$t = (m - m_*)n^{1/2}/s$$

where s is the sample standard deviation. Hence, for a sample of n measurements drawn from a Gaussian distribution a precision limit P can be defined for the mean of the measurements as

$$P = t_1 s/n^{1/2}$$

The calibration of a block gage used to measure the force indicated that the sample mean for the sensitivity was 29.76 millivolts per pound and the sample standard deviation for the sensitivity was 0.12 millivolt per pound for a sample size of 24 different applied loads to the gage. For a sample size of 24, the probability is 0.95 (95 percent confidence) that the random variable t is between $t_1 = -2.069$ and $t_1 = 2.069$. Hence,

$$P = 0.0507 \text{ millivolt per pound}$$

$$P/m = 0.0017$$

The uncertainty U for the 24 calibrations is determined by combining the precision and bias limits by the root-sum-square method. It has not been possible to determine the actual bias limit at this time. However after carefully evaluating the calibration process, it appears that the bias limit would be relatively small compared to the precision limit. Hence, the uncertainty is

$$U/m = P/m = 0.0017$$

or 0.17 percent for a 95 percent confidence. The value of $m_*$ is between 29.71 and 29.81 millivolts per pound.

The relationship between the sample standard deviation s and the parent population standard deviation $s_*$ can be determined from the chi-square probability distribution. For a sample size n, the random variable u having a chi-square probability distribution is given by

$$u = (n - 1)s^2/s_*^2$$

For a sample size of 24 the probability of the random variable u being between $u_1 = 11.688$ and infinity is 0.975 and between $u_1 = 38.076$ and infinity is 0.025. Using the relationship

$$s_*^2 = (n - 1)s^2/u_1$$

the value of $s_*$ is between 0.09 and 0.17.

MEASUREMENT OF GAGE INTERACTIONS

Straightline and rotating arm experiments are performed with the model supported by two vertical struts in tandem, usually spaced 6 to 8 feet apart. The reference point is located midway between the two struts. Three force block gages are located at each strut as an assembly for measuring the longitudinal, lateral, and normal force components with respect to the body axes. The pitching and yawing moments about the reference point are determined from the difference in the measured reaction forces at each strut multiplied by one half the strut spacing. A separate gage to measure the rolling moment is located at either the forward or aft strut.

The usual practice is to calibrate each individual gage as discussed previously. It is assumed that when the block gages are assembled into either the forward or aft unit they are properly aligned to measure only the force they are positioned to measure. That is, it is assumed that when a pure normal force is applied to the model, the normal force block gages measure the total normal force and the other force gages measure zero force. However, it has been found that when a large pure normal force is applied to the model, there are small output signals on all of the other gages, particularly the lateral force gage. It is important to be able to quantify these small lateral force output signals when relatively small lateral forces need to be measured.

To determine the interactions among the various block gages, combinations of known loads must be applied to the model. In 1993, a method was developed for calibrating the block gage assemblies by loading a model with a plus or minus lateral force, plus or minus yawing moment, plus normal force, and plus or minus rolling moment. The calibrations were performed in water in the drydock at the end of the towing basin. Another method was developed for calibrating the gages in air by loading the gage channel with all combinations of forces.

A typical calibration sequence was as follows: (1) a zero was taken with all of the weight pans unloaded, (2) calibrated weights are placed on selected pans, and (3) the weights were removed from the pans and another zero was taken. The data that were taken included the outputs from the seven block gages, the weights that were placed on each of the ten pans, and the coordinates of the location at which the loads were applied.

The results of the analysis to determine the interactions among the various block gages indicated, for example, that when a large pure normal force is applied to the model, there are small output signals on all of the other gages, particularly the lateral force gage. Calibrating the individual block gages is an acceptable practice when the forces that are being measured are large. However, it is important to be able to quantify these small lateral force output signals when relatively small lateral forces need to be measured. Although the full linear and nonlinear interaction calibrations do give better matches with the known input forces, the differences overall for the primary

forces are not large. The results of the calibrations suggest that systematic cross-channel responses require a full linear or nonlinear interaction matrix. However, the calibrations also indicate that cross-channel block gage outputs have large variations which may mask any systematic trends. For example, there are relatively large uncertainties associated with some of the off-diagonal elements of the interaction matrix. When the variations in the cross-channel block gage outputs are better quantified or eliminated, it will be possible to determine if calibrations to calculate the off-diagonal terms in the matrix are required. Corrections for the deflection of the model marginally improve some of the force predictions, but significantly degrade the rolling moment prediction when the complete linear interaction matrix is used. Based on the variations in the cross-channel outputs and relatively large uncertainties, it appears that any small deflection of the model has only a small effect on accurately resolving the forces and moments.

## MEASUREMENT OF THE ANGLE OF ATTACK

Different methods have been used to measure the angle of attack of the model during straightline captive-model experiments performed on the Planar Motion Mechanism. Model support and positioning for this type of experiments is accomplished by an assembly consisting of a tilt table and a pair of twin towing struts. The tilt table is a rectangular frame constructed primarily of 8-inch steel I-beams welded together. A heavy walled steel tubing is inserted transversely through the frame at the longitudinal midpoint and welded to it. The tubing serves as an axle for tilting the table in the pitch plane. The end of the tilt table is moved vertically by a Saginaw ball-bearing screw jack mounted in the support bracket at the carriage end. A system of micro-switches is installed on the support backet with a spacing so that one-degree increments can be set on the tilt table over a range of plus and minus 18 degrees.

To improve the accuracy of the measurement of the angle of attack, a potentiometer and a belt drive was added to the apparatus in 1985. A further improvement was made with the addition of an anti-backlash gear in November 1991. An angle encoder was installed at the same time, but it had to be replaced. The angle encoder is a resolver that provides a digital signal of 4096 bits per revolution (0.088 degree per bit). A gunner's quadrant (a bubble level) was used to provide the reference angle for the tilt table.

A summary of the four types of measurements are as follows:

| Type | Description |
|---|---|
| 1. | Micro switch |
| 2. | Potentiometer with belt drive |
| 3. | Potentiometer with anti-backlash gear |
| 4. | Encoder with anti-backlash gear |

Calibrations have been performed for each type of measurement and then least-square fitted to the line $y = Ax + B$. The coefficients of the least-square fit

A and B, index of determination ID, and standard error of estimate SEE were determined. A sample standard deviation was derived by taking the difference between the actual reading from the measuring device and the value calculated from the least-square fit and then dividing through by the calculated value.

For example, for the Type 4 measurement, a sample standard deviation was calculated to be 0.0092 degrees for a sample size n of 22 different angles to which the tilt table was set. The probability is 0.95 that the random variable t is between $t_1 = -2.086$ and $t_1 = 2.086$. Hence the precision limit is

$$P/m = 0.0041.$$

As indicated previously, the uncertainty is determined by combining the precision and bias limits by the root-sum-square method. The actual bias limit for the measurement of the angle of attack was not determined. However, it appears that the bias limit for the angle of attack measurement would be relatively small compared to the precision limit.

The coefficient A of the least-square fit can be used to determine the average accuracy of measuring the angle of attack over the range -18 to 18 degrees, whereas the normalized precision limit P/m indicates the uncertainty associated with a calibration consisting of n angles. For example, a comparison between a Type 1 and a Type 4 calibration is as follows:

| Type | A | B | ID | SEE | n | Accuracy Percent | Uncert. Percent |
|---|---|---|---|---|---|---|---|
| 1 | 0.9930 deg/deg | -0.000600 deg | 0.999909 | 0.1006 deg | 30 | 0.70 | 0.67 |
| 4 | 1.0003 deg/deg | -0.017687 deg | 0.999994 | 0.0255 deg | 22 | 0.03 | 0.41 |

As can be seen, there is a significant improvement in the accuracy of measuring the angle of attack by using the encoder (Type 4). The uncertainty would be reduced if the number of angles n used in the calibration were increased.

A band about the least-square fit which has the magnitude of plus and minus twice the standard error of estimate (SEE) will contain approximately 95 percent of the data points if the bias is negligible. A comparison between the values of twice the SEE for Types 1 and 4 calibrations is as follows:

| Type | 2 x SEE degrees |
|---|---|
| 1 | 0.201 |
| 4 | 0.051 |

This comparison also indicates that there is a significant improvement in the accuracy of measuring the angle of attack using the encoder (Type 4).

UNCERTAINTY OF THE CONTROL SURFACE ANGLE

The deflection of the sternplanes, rudders, sailplanes, or bowplanes is usually performed manually by loosening a split clamp that prevents the plane from rotating on the stock. The desired angle of the plane is set using a protractor template. After the angle is set, the split clamp is tightened. A line is inscribed on the hull or the fixed portion of the control surface indicating zero angle. It is estimated that the inscribed line can be as much as 1 degree in error, and this is the called the bias B. The ability to read the protracter while setting an angle on the plane can result in a precision error P of about 0.5 degree. The uncertainty U can be determined by combining the precision and bias limits by the root-sum-square method as follows:

$$U^2 = B^2 + P^2$$

Hence, the uncertainty is 1.12 degrees. Since the control effectiveness derivatives are usually determined by measuring the slope of the curves of nondimensional hydrodynamic force and moment over about 10 degrees of control surface angle, the uncertainty of the control surface angle would be 0.1120.

UNCERTAINTY OF MODEL LENGTH, SPEED, AND DENSITY

The uncertainty in the overall length of the model is estimated to be 1/16 inch in 13.9792 feet or 0.0004. The uncertainty in the carriage speed is estimated to be 0.01 knot in 6.5 knots or 0.0015. The uncertainty in the density is estimated to be 0.0006 lb-sec$^2$/ft$^4$ for a change of 3 degrees F in 1.9367 lb-sec$^2$/ft$^4$ or 0.0003.

PROPAGATION OF INDIVIDUAL UNCERTAINTIES INTO VARIOUS PARAMETERS

Stability Derivatives

The uncertainties in the individual variables propagate through the data reduction equations into the stability and control derivatives. The uncertainties in the measurement of the force and the measurement of the tilt table angle can be used to determine the uncertainty in the stability derivative $Z_w'$.

The stability derivative $Z_w'$ can be determined by the following expression:

$$c = Z_w' = kZ/a$$

where Z is the change in the measured force, a is the corresponding change in the measured tilt table angle, and k is the nondimensionalizing constant. The square of the value of the uncertainty in c is given by

$$U_c^2 = (U_Z \, dc/dZ)^2 + (U_a \, dc/da)^2$$

This expression can be written as

$$(U_c/c)^2 = (U_Z/Z)^2 + (U_a/a)^2$$

For example, if the Type 4 measurement of the angle of attack is used for the calculation and if the bias limits are negligible,

$$U_Z/Z = P_Z/m_Z = 0.0028$$

$$U_a/a = P_a/m_a = 0.0041$$

Hence,

$$U_c/c = 0.0050.$$

Control Derivatives

Similarly, the uncertainties in the measurement of the force and the measurement of the control surface angle, denoted by s, can be used to determine the uncertainty in the control effectiveness derivative $Z_s'$ where

$$c = Z_s' = kZ/s$$

The square of the value of the uncertainty in c is given by

$$(U_c/c)^2 = (U_Z/Z)^2 + (U_s/s)^2$$

and $U_c/c = 0.1120$.

REPEATABILITY OF THE STABILITY DERIVATIVES

It is difficult at the present time to quantify all of the individual bias and precision errors. However by using the submarine stability and control data base, the following estimates of repeatability may be assigned to the experimental values of the stability and control derivatives for fully appended submarines: (1) static derivatives $Z_w'$, $M_w'$, $Y_v'$, and $N_v'$ about 5 percent, (2) rotary derivatives $Z_q'$, $M_q'$, $Y_r'$, and $N_r'$ about 10 percent if measured on the rotating arm, (3) control derivatives about 10 percent, and (4) added mass and moment of inertia derivatives $Z_{\dot{w}}'$, $M_{\dot{q}}'$, $Y_{\dot{v}}'$, and $N_{\dot{r}}'$ about 7 percent. The uncertainty error in calculating the nondimensional mass is about 2 percent.

UNCERTAINTY IN DETERMINING THE MARGIN OF STABILITY

The uncertainty errors of the individual stability derivatives propagate into the margin of stability. The margin of stability is a function of four nondimensional stability derivatives, the nondimensional mass of the submarine, and the nondimensional longitudinal location of the center of gravity from the reference point. In the vertical plane

$$G_v = 1 - M_w'(Z_q' + m')/[Z_w'(M_q' - x_G'm')]$$

which has the form

$$G = 1 - e_1(e_2 + e_3)/[e_4(e_5 + e_6e_3)]$$

The square of the uncertainty in G is given by

$$\begin{aligned}(U_G/G)^2 = {} & (e_1/G)^2(dG/de_1)^2(U_{e1}/e_1)^2 \\ & + (e_2/G)^2(dG/de_2)^2(U_{e2}/e_2)^2 \\ & + (e_3/G)^2(dG/de_3)^2(U_{e3}/e_3)^2 \\ & + (e_4/G)^2(dG/de_4)^2(U_{e4}/e_4)^2 \\ & + (e_5/G)^2(dG/de_5)^2(U_{e5}/e_5)^2 \\ & + (e_6/G)^2(dG/de_6)^2(U_{e6}/e_6)^2\end{aligned}$$

where $dG/de_k$ are partial derivatives and $U_{ek}/e_k$ are the uncertainties in each $e_k$. The partial derivatives are given by the following expressions:

$$dG/de_1 = -(e_2 + e_3)/(e_4e_7)$$

$$dG/de_2 = -e_1/(e_4e_7)$$

$$dG/de_3 = -e_1/(e_4e_7) + e_1(e_2 + e_3)e_6/(e_4e_7^2)$$

$$dG/de_4 = e_1(e_2 + e_3)/(e_4^2e_7)$$

$$dG/de_5 = e_1(e_2 + e_3)/(e_4e_7^2)$$

$$dG/de_6 = e_1(e_2 + e_3)e_3/(e_4e_7^2)$$

where

$$e_7 = e_5 + e_6e_3.$$

The uncertainty in G depends on the particular values of the nondimensional stability derivatives, the nondimensional mass, and the nondimensional longitudinal location of the center of gravity from the reference point.

For example, the uncertainties in G for motion in the vertical plane for the SSN 688 for various estimated uncertainties in the stability derivatives are as follows:

| $Z_w'$ and $M_w'$ | $Z_q'$ and $M_q'$ | G |
|---|---|---|
| 0.05 | 0.10 | 0.10 |
| 0.10 | 0.10 | 0.12 |
| 0.05 | 0.15 | 0.14 |
| 0.10 | 0.15 | 0.15 |
| 0.10 | 0.20 | 0.19 |
| 0.10 | 0.25 | 0.23 |

## VALIDATION

To determine how well the equations of motion, hydrodynamic force and moment coefficients, and experimental procedures combine to predict the maneuvering characteristics of the submarine, comparisons between full-scale trials and computer simulations are required. These maneuvers include open loop definitive maneuvers (meanders, overshoots, turns, spirals, acceleration, and deceleration), operational or tactical normal maneuvers (near-surface depthkeeping and coursekeeping, spiral descents, mission profiles, etc.), and emergency maneuvers (recovery from sternplane or rudder jams, recovery from flooding casualties, and load supportability).

Since a large part of the effort described is devoted to prediction, namely providing solutions to problems before the fact, an active correlation program is required. On the basis of correlation made to date, it appears that the equations of motion (Reference 10) described previously, will for the most part, yield good predictions of trajectories associated with a variety of maneuvers in submerged ahead motions.

THIS PAGE INTENTIONALLY LEFT BLANK.

## REFERENCES


1. Huang, Thomas T. and Jerome P. Feldman, "Methods of Predicting the Motions of Submarines," Winter Annual Meeting of the American Society of Mechanical Engineers, Paper 88-WA/DSC-22 (November-December 1988).

2. Gertler, M., "The DTMB Planar Motion Mechanism System," NSRDC Report 2523 (July 1967).

3. Goodman, A., "Experimental Techniques and Methods of Analysis Used in Submerged Body Research," Proceedings of the Third Symposium on Naval Hydromechanics, Office of Naval Research (1960).

4. Imlay, F.D., "A Nomenclature for Stability and Control," DTMB Report 1319 (May 1959).

5. Brownell, W.F., "A Rotating Arm and Maneuvering Basin," DTMB Report 1053 (July 1956).

6. Lamont, P.J., "Pressures Around an Inclined Ogive Cylinder with Laminar, Transitional, or Turbulent Separation," AIAA Journal Volume 20 Number 11 (November 1982).

7. Lambert, J.D., "The Effect of Changes in the Stability Derivatives on the Dynamic Behavior of a Torpedo," Admiralty Research Laboratory, Aeronautical Research Council Reports and Memoranda 3143 (March 1956).

8. Bottaccini, M.R., "The Stability Coefficients of Standard Torpedoes," U.S. Naval Ordnance Test Station Report NOTS 909 (NAVORD Report 3346) (July 1954).

9. Gertler, M. and G. Hagen, "Standard Equations of Motion for Submarine Simulation," NSRDC Report 2510 (June 1967).

10. Feldman, J. "DTNSRDC Revised Standard Submarine Equations of Motion," DTNSRDC Report SPD-0393-09 (June 1979).

11. Imlay, F.H., "The Complete Expressions for Added Mass of a Rigid Body Moving in an Ideal Fluid," DTMB Report 1528 (July 1961).

12. Imlay, F.H., "Complete Expressions for the Gravitational and Buoyancy Force Terms in the Equations of Motion of a Submerged Body," DTMB Report 1845 (July 1964).

13. Whicker, L.F. and L.F. Fehlner, "Free Stream Characteristics of a Family of Low-Aspect Ratio, All-Movable Control Surfaces for Application to Ship Design," DTMB Report 933 (December 1958).

14. Pitts, W.C., J.N. Nielsen, G.E. Kaattari, "Lift and Center of Pressure of Wing-Body-Tail Combinations at Subsonic, Transonic, and Supersonic Speeds,"

NACA Report 1307 (1957).

15. Dempsey, E., "Static Stability Characteristics of a Systematic Series of Stern Control Surfaces on a Body of Revolution," DTNSRDC Report 77-0085 (August 1977).

16. Coleman, H.W. and W.G. Steele, "Experimentation and Uncertainty Analysis for Engineers," John Wiley and Sons (1989).